Gptc Thirurangadi, Chelari

Booklet Code No. **98481**

Roll Number : | | | | | | |

INSTRUCTIONS TO CANDIDATES

[Do not open this booklet unless you are asked to do so]

1. Fill in the OMR sheet carefully as per the instructions given on the back side of the OMR sheet.
2. Use only black/blue ball point pen to fill the OMR sheet.
3. Write your Roll Number (six digits) on the Question Booklet and on the left hand side of the OMR sheet (basic data part).
4. There are 120 Objective type multiple choice questions, which are to be answered in 120 minutes.
5. There are 4 options (A, B, C & D) for each question. Mark your answer corresponding to each question by darkening the corresponding bubble in the OMR sheet with a black/blue ball point pen. **For every correct answer 3 mark will be awarded and for every incorrect answer 1 mark will be deducted from the total marks scored. No deduction of mark will be made for unanswered questions.** Marking of more than one bubble against a question in the OMR sheet will be considered as an incorrect answer. Erasing, overwriting, partial marking etc. may also be treated as incorrect answer.
6. Candidates are not permitted to use Calculator, Logarithm table, Mobile phone or any other electronic equipment in the examination hall.
7. Please handover the Answer Sheet along with its duplicate copy to the invigilator and collect the duplicate copy from the invigilator before leaving the Examination Hall. Failure to comply this may lead to cancellation of your candidature. The Admit Card and Question Booklet can be retained by the candidates after the examination.
8. Any misconduct and attempt of malpractice may also lead to cancellation of your candidature.
9. Answer keys will be published in the website www.tekerala.org after the examination. Complaints, if any, regarding the answer keys with DOCUMENTARY PROOF may sent to the Joint Controller, Office of the Controller of Technical Examinations, Kaimanam, Thiruvananthapuram-40 so as to reach this office on or before 3-5-2012, 4 p.m. Complaints not substantiated with supporting documents will not be considered and the decision of the experts shall be final.
10. Candidates are permitted to leave the examination hall only after the completion of examination time.

Downloaded from www.gptcthirurangadi.in

Gptc Thirurangadi, Chelari

Answer questions 1-5 based on the passage given :

It is the height of selfishness for men who fully appreciate in their own case the great advantage of a good education, to deny these advantages to women. It is argued that women have their domestic duties to perform and that if they were educated they would busy themselves in their books and have little time for attending to the management of their households. Ofcourse it is possible for women, as it is for men to neglect necessary work in order to spare more time for reading sensational novels. But women are no more liable to this temptation than men, and most women would be able to do their household work all the better for being able to refresh their minds in the intervals of leisure with a little reading. Female education is a vital necessity as it can empower, enlighten and uplift the morale of women in the society.

1. Women are denied the advantages of good education because .....
   (A) They have domestic duties to perform.
   (B) They cannot appreciate the advantages of good education.
   (C) They will spend time in reading without doing the household work.
   (D) Men are highly selfish.

2. Women sometimes neglect necessary work .....
   (A) Because men also neglect such work.
   (B) To have spare time for reading sensational novels.
   (C) As they have domestic duties to do.
   (D) To refresh their minds.

3. The word "temptation" in the passage relates to .....
   (A) Reading books to refresh the minds.
   (B) Neglect of work to read novels.
   (C) Performing domestic duties.
   (D) Spending little time for reading.

4. The word opposite in meaning to vital is .....
   (A) Noble (C) Ideal
   (B) Important (D) Trivial

5. A suitable title to the passage is :
   (A) Women in villages (C) Women in society
   (B) Women and education (D) Women in the family

Choose the correct option to complete the sentences : (6-7)

6. The proverb says that ..... killed the cat.
   (A) Ecstasy (C) Belief
   (B) Curiosity (D) Execution

Downloaded from www.gptcthirurangadi.in

Gptc Thirurangadi, Chelari

7. Kiran ..... with what I say.

(A) never agreed (C) has never agree

(B) is never agreeing (D) never agrees

Identify the wrong section (8-10)

8. Send the letter / by post / at my Kollam address / today itself.

(A) send the letter (C) today itself

(B) by post (D) at my Kollam address

9. Have you / noticed / the clause / of a lobster ?

(A) Have you (C) the clause

(B) of a lobster (D) noticed

10. The doctors did not / hold out / many hope / for her recovery.

(A) The doctors did not (C) many hope

(B) hold out (D) for her recovery

11. If the system of equations $x + 2y - 3z = 1$, $(p + 2)z = 3$, $(2p + 1)y + z = 2$ is consistent, then the value of p ?

(A) -2 (C) $-\frac{1}{2}$

(B) $\frac{1}{2}$ (D) 2

12. The number of linearly independent eigen vectors of $A = \begin{bmatrix} 2 & 1 \\ 0 & 2 \end{bmatrix}$

(A) 0 (C) 2

(B) 1 (D) infinite

13. The eigen values of a square matrix A are 1 and -2. Then A^{-1} is equal to

(A) $\frac{1}{2}[A - I]$ (C) $[A - I]$

(B) $\frac{1}{2}[A + I]$ (D) $2(A + I)$

14. The canonical form of the quadratic form $4x^2 + 4y^2 + 2xy$ is

(A) $3x_1^2 + 5x_2^2$ (C) $5x_1^2 - 3x_2^2$

(B) $3x_1^2 - 5x_2^2$ (D) $x_1^2 + 5x_2^2$

15. The eigen values of the matrix A^{-1} if $A^2 = \begin{bmatrix} 19 & 6 \\ 18 & 7 \end{bmatrix}$ are

(A) 1, 5 (C) $1, -\frac{1}{3}$

(B) $-1, 3$ (D) $1, \frac{1}{5}$

16. The 20th derivative of $2\sin 5x \sin 3x$ is

(A) $8^{20} \sin 8x + 2^{20} \sin 2x$ (C) $8^{20} \cos 8x + 2^{20} \cos 2x$

(B) $8^{20} \cos 8x - 2^{20} \cos 2x$ (D) $2^{20} \cos 2x - 8^{20} \cos 8x$

Downloaded from www.gptcthirurangadi.in

Gptc Thirurangadi, Chelari

17. The value of $\lim_{x \to \alpha} x \sin \frac{1}{x}$ is equal to

(A) 0 (C) 1

(B) α (D) limit does not exist

18. The centre of curvature of the circle $x^2 + y^2 - 2x - 4y - 5 = 0$ is

(A) (1, 2) (C) (–1, –2)

(B) (0, 0) (D) (2, 4)

19. If $u = \tan^{-1}\left(\frac{x-y}{x+y}\right)^{3/2}$, then $x \frac{\partial u}{\partial x} + y \frac{\partial u}{\partial y}$ is equal to

(A) tan u (C) 1

(B) u (D) 0

20. For the function $f(x, y) = x^2 + y^2$, (0, 0) is a

(A) maximum point (C) saddle point

(B) minimum point (D) neither maximum nor minimum

21. The infinite series $\frac{1}{1.2.3} + \frac{3}{2.3.4} + \frac{5}{3.4.5} + \ldots\ldots\ldots$

(A) converges (C) conditionally convergent

(B) diverges (D) oscillates

22. The series $\sum_{n=1}^{\alpha} \sqrt{\frac{n}{n+1}}\, x^n$

(A) converges for $x \le 1$, diverges for $x > 1$

(B) diverges for all values of x

(C) converges for all values of x

(D) converges for $x < 1$ and diverges for $x \ge 1$

23. Which one of the following statement is true :

(A) every convergent series converges absolutely

(B) every absolutely convergent series converges

(C) every alternating series converges absolutely

(D) every alternating series converges to zero.

24. The infinite series $\sum_{n=1}^{\alpha} \left(\frac{n}{2n+1}\right)^n$

(A) converges (C) conditionally convergent

(B) diverges (D) oscillates

25. The infinite series $1 - \frac{1}{5} + \frac{1}{9} - \frac{1}{13} + \ldots\ldots\ldots$

(A) converges (C) conditionally convergent

(B) diverges (D) oscillates

Downloaded from www.gptcthirurangadi.in

26. Let $f(x)$ be function which satisfies Dirichlet's condition in its domain and let $f(x)$ has finite discontinuity at $x = a$. Then at $x = a$ the corresponding Fourier series converges to

(A) $f(a)$
(B) $f(a+)$
(C) $f(a-)$
(D) $\frac{1}{2}[f(a+) + f(a-)]$

27. Fourier series representation of $f(x) = |x|$ in $-\pi < x < \pi$ and $f(x + 2\pi) = f(x)$ is

(A) $f(x) = \frac{\pi}{2} - \frac{4}{\pi} \sum_{n=1}^{\alpha} \frac{\cos(2n-1)x}{(2n-1)^2}$

(B) $f(x) = \frac{\pi}{2} + \frac{4}{\pi} \sum_{n=1}^{\alpha} \frac{\cos(2n-1)x}{(2n-1)^2}$

(C) $f(x) = \frac{\pi}{2} - \frac{4}{\pi} \sum_{n=1}^{\alpha} \frac{\sin(2n-1)x}{(2n-1)^2}$

(D) $f(x) = \frac{\pi}{2} - \frac{4}{\pi} \sum_{n=1}^{\alpha} \frac{\cos(2n+1)x}{(2n+1)^2}$.

28. Which of the following functions has only cosine terms in its Fourier series expansion ?

(A) $f(x) = \begin{cases} 1 + x; & -\pi < x < 0 \\ 1 - x; & 0 < x < \pi \end{cases}$ and $f(x + 2\pi) = f(x)$

(B) $f(x) = x \sin x$ in $-\pi < x < \pi$ and $f(x + 2\pi) = f(x)$

(C) $f(x) = x \cos x$ in $-3 < x < 3$ and $f(x + 6) = f(x)$

(D) both (A) and (B).

29. Laplace transform of $\frac{1 - e^t}{t}$ is

(A) $\log\left(\frac{s}{s-1}\right)$

(B) $\log\left(\frac{s-1}{s}\right)$

(C) $\frac{1}{s} - \frac{1}{s-1}$

(D) $\frac{1}{s-1} - \frac{1}{s}$

30. Inverse Laplace transform of $\frac{s+3}{s^2 + 6s + 10}$ is

(A) $e^{-3t} \cos t$

(B) $e^{3t} \cos t$

(C) $e^{-3t} \sin 3t$

(D) $e^{-t} \sin 3t$

Downloaded from www.gptcthirurangadi.in

31. Separation of coarse aggregate from mortar during transportation is known as
(A) Bleeding (C) Creeping
(B) Seggregation (D) Flooding

32. The process of proper and accurate measurements of concrete ingredients for uniformity of proportion is known as :
(A) Curing (C) Batching
(B) Mixing (D) Grading

33. Sand in grading zone IV are
(A) Coarse (C) Medium to fine
(B) Medium (D) Fine

34. The defects developed at the bases of branches cut off from the tree are called :
(A) Rind galls (C) Shakes
(B) Knots (D) Burls

35. To stagger vertical joints in successive courses of a wall, a piece of brick is generally used at the end of the course which is known as :
(A) closer (C) header
(B) bat (D) stretcher

36. The stretcher bond is generally used for :
(A) half brick wall (C) 1½ brick wall
(B) simple brick wall (D) arches

37. The foundation which consists of a thick reinforced cement slab covering whole area to support heavy concentrated structural loads is known as
(A) combined footing (C) strap footing
(B) raft footing (D) strip footing

38. Finely divided solid substance giving the body to the paint is known as
(A) drier (C) base
(B) vehicle (D) solvent

39. The vertical side member of a shutter frame is known as
(A) style (C) reveal
(B) post (D) Mullion

40. The highest line of a sloping roof whose two opposite slopes meet is known as
(A) rafter (C) crown
(B) ridge (D) eave

41. The opening provided in sloping roof with its top parallel to the roof surface is called
(A) dormer window (C) louvered window
(B) lantern window (D) skylight window

Downloaded from www.gptcthirurangadi.in

42. The process of taking levels on each side of a main line at sight angles to that line inorder to determine a vertical cross section of the surface of the ground is known as

(A) differential levelling
(B) cross section
(C) profile levelling
(D) reciprocal levelling

43. The length of a line is found to be 8 m when measured with a 20 meter chain. If the chain is 12 cm too short the correct length of the line is

(A) 8.048 m
(B) 7.952 m
(C) 8.12 m
(D) 7.88 m

44. The first staff reading after the level has been moved to a new position is

(A) foresight
(B) intermediate sight
(C) back sight
(D) change point

45. Convert the whole circle bearing of 22°30′ to quadrantal bearing

(A) N 22°30′ E
(B) E 22°30′ N
(C) N 30°22′ E
(D) E 30°22′ N

46. In Carnot cycle the algebraic sum of the entropy changes for the cycle is

(A) Positive
(B) Zero
(C) Negative
(D) Depends upon the properties of substance

47. If T1 and T2 are the maximum and minimum temperatures in a cycle then Carnot Efficiency will be

(A) (T1+T2)/T1
(B) (T1–T2)/T1
(C) (T2–T1)/T2
(D) T1/(T1–T2)

48. During throttling process one of the following remains constant :

(A) Internal energy
(B) Pressure
(C) Enthalpy
(D) Entropy

49. In a four stroke petrol engine the working on otto cycle, ignition of fuel takes place :

(A) Adiabatically
(B) At constant pressure
(C) At constant volume
(D) Isothermally

50. In battery ignition system a high voltage is produced in the spark plug by means of :

(A) Induction coil
(B) Distributor
(C) Capacitor
(D) Starter

51. Critical temperature of a gas is the temperature :

(A) At which it gets liquefied completely
(B) Above which it cannot be liquefied
(C) Below which it becomes a solid
(D) At which liquefaction just starts

Downloaded from www.gptcthirurangadi.in

52. Economiser is used in steam boilers for

(A) Heating the feed water (C) Pre-heat the air to the furnace

(B) Cooling the feed water (D) Economise the use of feed water

53. In a vapour compression system the refrigerant immediately after expansion valve is

(A) Saturated liquid (C) Wet vapour

(B) Sub cooled liquid (D) Dry vapour

54. In vapour absorption system, Ammonia is used as

(A) Refrigerant (C) Absorbent

(B) Coolant (D) Oxidizer

55. The mating gears have 70 and 30 teeth. If their common module is 5 mm per tooth, the center distance between their axis is

(A) 200 mm (C) 150 mm

(B) 250 mm (D) 100 mm

56. Elastic creep is due to

(A) Over loading

(B) Friction and wear

(C) Relative motion between pulley surface and belt

(D) Initial tension in the belt

57. The major constituent of moulding sand is

(A) Silica (C) Carbon

(B) Clay (D) Sulphur

58. Which of the process is different from the rest of the process

(A) Cyniding (C) Pack carburizing

(B) Nitriding (D) Electroplating

59. Priming is required in

(A) Gear pump (C) Centrifugal pump

(B) Reciprocating pump (D) Screw pump

60. A welding process in which the required heat is obtained by an exothermal chemical reaction

(A) Gas welding (C) Thermit welding

(B) Resistance welding (D) Arc welding

61. The unit of magneto motive force (mmf) is

(A) Newton (C) Ampere-turns

(B) Weber/m^2 (D) Volt

Downloaded from www.gptcthirurangadi.in

Gptc Thirurangadi, Chelari

62. The series combination of a 40 W lamp and a 60 W lamp is connected to 240 volts supply. Both lamps are rated for 240 V. For this pair of lamps, which of the following statements is correct ?

(A) 60 W lamp will burn with higher brightness

(B) 40 W lamp will burn with higher brightness

(C) Both lamps will have equal brightness

(D) Both lamps will not light up

63. A coil of 100 turns is wound on an iron ring. If a narrow cut is made on the ring to form an air gap, what will happen to the inductance of the coil and reluctance of the magnetic circuit ?

(A) Both inductance and reluctance will increase

(B) Both inductance and reluctance will decrease

(C) Inductance will increase and reluctance will decrease

(D) Inductance will decrease and reluctance will increase

64. Two impedances (2+j) and (2–j4) are connected in series. The net impedance is

(A) 9 ohms (C) 5 ohms

(B) 1 ohm (D) $2\sqrt{2}$ ohms

65. An ac voltage is specified by the expression : $e = 100\sqrt{2}\sin 314\,t$. Its rms voltage and frequency are

(A) $100\sqrt{2}$ V, 314 Hz (C) $100\sqrt{2}$ V, 50 Hz

(B) 100 V, 100 Hz (D) 100 V, 50 Hz

66. For a dc shunt motor connected to a fan load,

(A) Speed is proportional to field current

(B) Speed is inversely proportional to field current

(C) Speed is independent of field current

(D) When field current is increased, speed will initially increase and then decrease.

67. Maximum possible speed in three phase synchronous motors when working with 400 V, 50 Hz supply is

(A) 1500 rpm (C) 6000 rpm

(B) 3000 rpm (D) there is no limit to speed

68. For a typical transformer, copper loss is proportional to

(A) voltage of operation (C) square of percentage load

(B) percentage load (D) square root of percentage load

69. Which of the following equipment will protect against accidental electric shocks ?

(A) MCB (C) MCCB

(B) ELCB (D) HRC fuse

70. Among the following lamp types, which lamp is having the best colour rendering index ?

(A) incandescent lamps (C) mercury vapour lamp

(B) fluorescent lamps (D) sodium vapour lamp

Downloaded from www.gptcthirurangadi.in

Gptc Thirurangadi, Chelari

71. In lead acid battery, the electrolyte is

(A) Concentrated sulphuric acid (C) Concentrated hydrochloric acid

(B) Diluted sulphuric acid (D) Diluted hydrochloric acid

72. In a thermal power plant, the economiser is used to

(A) pre-heat the boiler feed water (C) convert steam to water

(B) pre-heat the inlet air (D) measure the consumption of fuel

73. In a distribution network, the value of diversity factor will be

(A) more than 1 (C) in the range of 0 to 2

(B) less than 1 (D) in the range of –1 to +1

74. Among the transmission voltages shown below, which is not a standard used in Kerala ?

(A) 66 kV (C) 230 kV

(B) 110 kV (D) 400 kV

75. The transformer type normally used for 3-phase distribution is

(A) star-delta (C) star-star

(B) delta-star (D) delta-delta

76. In connection with the colour code for tubular ceramic capacitor, which of the following statement is not true ?

(A) First band represents temperature coefficient

(B) Third band represents second digit

(C) Second band represents first digit

(D) Fourth band represents tolerance

77. Even though carbon is in fourth group of the periodic table, it is not used as a semi conductor because it has

(A) High dielectric constant

(B) Large energy gap

(C) Low temperature coefficient

(D) Low thermal conductivity

78. The forbidden energy gap in semiconductor

(A) Is always zero

(B) Lies between the valance band and conduction band

(C) Lies below the valance band

(D) Lies just above the conduction band

79. A doped semiconductor is called

(A) Impure semiconductor (C) Bipolar semiconductor

(B) Dipole semiconductor (D) Extrinsic semiconductor

Downloaded from www.gptcthirurangadi.in

80. The turns ratio of a transformer used in a halfwave rectifier is 10:1. The primary is connected to the power mains 220 V, 50 Hz. The peak inverse voltage of the diode will be :

(A) 62 V (C) 41 V

(B) 50 V (D) 31 V

81. Which of the following is necessary for transistor action ?

(A) The base region must be very wide

(B) The base region must be very narrow

(C) The base region must be heavily doped

(D) The collector region must be heavily doped

82. An SCR triggered by a current pulse through its gate can be turned off by

(A) giving another pulse of opposite polarity to the gate

(B) by giving pulse to the cathode

(C) by giving pulse to the anode

(D) by reversing the polarity of anode and cathode voltage

83. The thermal run-away in a CE transistor amplifier can be prevented by biasing the transistor in such a manner that

(A) $V_{CE} > V_{cc}/_2$ (C) $V_{CE} = V_{cc}/_2$

(B) $V_{CE} < V_{cc}/_2$ (D) $V_{CE} = 0$

84. Which one of the following oscillator is well suitable for the generation of wide range audio-frequency sine wave ?

(A) RC phase-shift oscillator (C) Col-pitts oscillator

(B) Wien-bridge oscillator (D) Hartley oscillator

85. A ring counter consisting of 5 flip-flop will have

(A) 5 states (C) 132 states

(B) 10 states (D) infinite states

86. For an AM wave, the maximum voltage was found to be 10 V and the minimum voltage was found to be 5 V. The modulation index of the wave would be

(A) 0.1 (C) 0.52

(B) 0.33 (D) 0.40

87. The circuit that separates synchronizing pulses from the composite video wave form in TV is

(A) an integrator (C) a clipper

(B) a differentiator (D) the delayed AGC amplifier

Downloaded from www.gptcthirurangadi.in

Gptc Thirurangadi, Chelari

88. Thermistors have
    (A) positive temperature coefficient
    (B) almost zero temperature coefficient
    (C) negative temperature coefficient
    (D) time dependent temperature coefficient

89. Which of the following statement is true ?
    (A) The common base configuration has the lowest band width
    (B) The common emitter configuration has the lowest current gain
    (C) The common collector configuration has the highest input impedance
    (D) The common emitter configuration has the lowest output impedance.

90. A NAND gate is called a universal logic element because
    (A) It is used for simple applications
    (B) All the minimizing techniques are applicable for optimum NAND gate realisation
    (C) Any logic function can be realised by NAND gates
    (D) Many digital computers use NAND gate

91. The first IC chip to contain all the components of a CPU on a single chip :
    (A) Intel 4004
    (B) Intel 8008
    (C) Intel 8080
    (D) Intel 8085

92. The execution speed of a processor can be increased by the technique :
    (A) Branch Prediction
    (B) Data Flow Analysis
    (C) Speculative Execution
    (D) All of the above.

93. RAID Level 0 is not a true member of RAID family, because :
    (A) Data are distributed across set of physical drives
    (B) Data are not distributed across set of physical drives
    (C) It include redundant information
    (D) It does not include redundant information

94. An example of a language processor :
    (A) Gedit
    (B) Internet Explorer
    (C) TASM
    (D) Windows NT

95. A ternary operator in C language :
    (A) Bitwise AND operator
    (B) Conditional expression operator
    (C) Modulus operator
    (D) Right shift operator

Downloaded from www.gptcthirurangadi.in

96. The value being returned from the following function (value-fn) to the main () function :

```
int Value_fn (int x)
{
int y = 50 ;

  if (x = y)
        return (y);
   return (5) ;

}
int main ()
{
        Value_fn (1) ;
        return (0) ;
}
```

(A) 50 (C) 1

(B) 5 (D) 0

97.
```
struct node
{
        int data ;
        struct node * ptr ;
} ;
struct node  X, Y, Z ;

X. ptr = & Y ;
Y. ptr = & Z ;
```

The above statements create

(A) A singly linked list of three nodes

(B) A doubly linked list of three nodes

(C) Three pointers to structure nodes

(D) Three independent structure nodes

98. Which of the following is not the function of a database administrator :

(A) Granting authorization for data access

(B) Database Schema modifications

(C) Periodic backing up

(D) Query processing.

99. The data structure which stores meta data about the structure of the database :

(A) Data files (C) Data dictionary

(B) Indices (D) Buffer manager

100. The clause that causes the tuples in the result of an SQL query to appear as a sorted sequence :

(A) where (C) order by

(B) group by (D) select

Downloaded from www.gptcthirurangadi.in

Gptc Thirurangadi, Chelari

101. The SYNC field in a CD-ROM block is used to :

(A) Store block address (C) Correct errors

(B) Carry user data (D) Find beginning of a block

102. A technique for shrinking the size of a file so that it takes up less space on the disk :

(A) Compaction (C) Compression

(B) Fragmentation (D) Garbage collection

103. Which of the ISO/OSI layer handles the task of breaking the transmitted bit stream into frames :

(A) Physical layer (C) Network layer

(B) Data link layer (D) Transport layer

104. A software application designed to find hyper text documents on the web and open the documents on the user computer :

(A) Web browser (C) FTP

(B) Electronic mail (D) Web server

105. One of the following is not a medium for linking the nodes in a computer network :

(A) Fiber optic cable (C) Infrared signal

(B) MODEM (D) Coaxial cable

106. The magnitude of the resultant force for the given system of forces (as shown) is .....

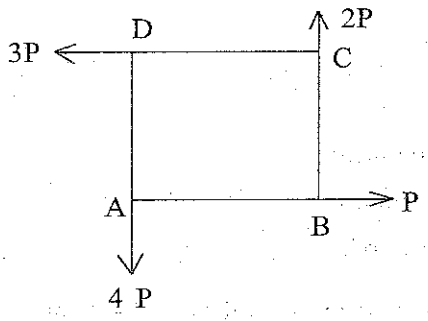

(A) P (C) $\sqrt{2}$ P

(B) 2P (D) $2\sqrt{2}$ P

107. The centre of gravity of a semicircle lies at a distance of ..... from its base measured along the vertical radius (R) :

(A) $\frac{4R}{3\pi}$ (C) $\frac{3R}{4\pi}$

(B) $\frac{4\pi}{3R}$ (D) $\frac{3\pi}{4R}$

108. The dimension of impulse as per the absolute (MLT) system is :

(A) MLT (C) $ML^{-1}T$

(B) MLT^{-1} (D) $ML^{-1}T^{-1}$

Downloaded from www.gptcthirurangadi.in

109. The moment of inertia of a right angled triangle (of width = b and depth = h) about the centroidal axis parallel to the width is

(A) $\frac{bh^3}{12}$ (C) $\frac{bh^3}{36}$

(B) $\frac{hb^3}{12}$ (D) $\frac{hb^3}{36}$

110. A simply supported beam AB of span 5 m is loaded as shown. The reaction at A is :

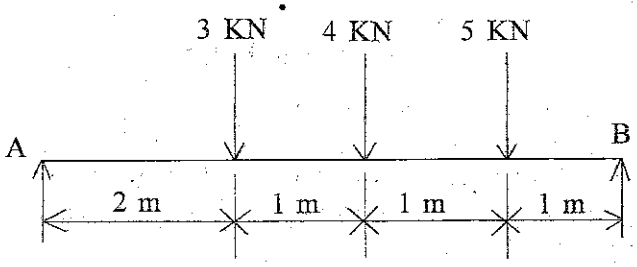

(A) 4.4 kN (C) 6.4 kN

(B) 5.4 kN (D) 7.4 kN

111. For a truss to be perfect, the relationship between its number of members (n) and the number of joints (j) is :

(A) n = 2j – 3 (C) n = 4j – 3

(B) n = 3j – 2 (D) n = 3j – 4

112. The horizontal and vertical reactions at the support A for the given framed structure (as shown) are :

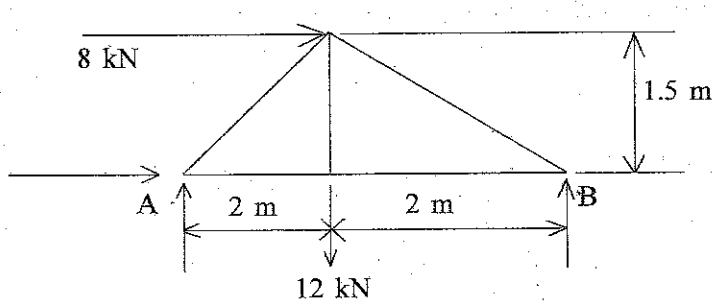

(A) 8 kN and 6 kN (C) 6 kN and 3 kN

(B) 3 kN and 8 kN (D) 8 kN and 3 kN

113. The force in the member PQ for the truss given below is (C = compression and T = tension)

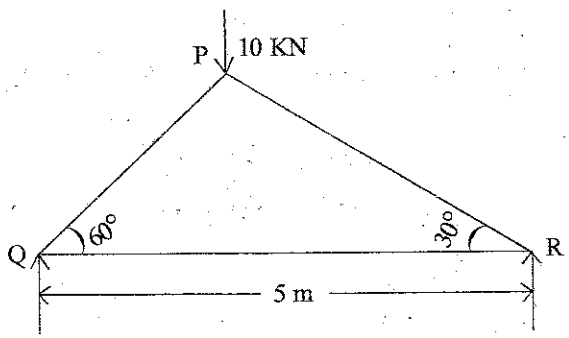

(A) 4.33 kN (C) (C) 4.33 kN (T)

(B) 8.66 kN (T) (D) 8.66 kN (C)

Downloaded from www.gptcthirurangadi.in

114. A particle starting from rest moves in a straight line whose equation of motion is given by $S = t^3 - 2t^2 + 3$. The velocity of the particle after 5 seconds is :

(A) 35 m/s
(B) 45 m/s
(C) 55 m/s
(D) 65 m/s

115. A person walks at a constant speed of 8 m/s along a straight line from P to Q and returns along QP at a constant speed of 4 m/s. The average speed and average velocity over the entire trip is :

(A) 0 m/s and 5.33 m/s
(B) 5.33 m/s and 0 m/s
(C) 0 m/s and 8.33 m/s
(D) 8.33 m/s and 0 m/s

116. A link CD is moving in a vertical plane. At a certain instant, when the link is inclined at 60° to the horizontal, the point C is moving horizontally at 2 m/s, while D is moving in a vertical direction. The velocity of D is :

(A) 0.58 m/s
(B) 1.15 m/s
(C) 2.30 m/s
(D) 2.85 m/s

117. A car travelling at 20 m/s finds a child on the road 50 m ahead. He instantly stops the engine and applies brake so as to stop the car within 10 m of the child. The time required to stop the car is :

(A) 1 s
(B) 2 s
(C) 3 s
(D) 4 s

118. The coefficient of restitution for a perfectly elastic body is :

(A) 0
(B) 0.5
(C) 1.0
(D) 1.5

119. The maximum height (H) reached by a projectile in a horizontal plane is given by :

[Where u = velocity of projection
α = angle of projection with horizontal
g = acceleration due to gravity]

(A) $\frac{u^2 \sin 2\alpha}{g}$
(B) $\frac{u^2 \sin^2 \alpha}{g}$
(C) $\frac{u^2 \sin 2\alpha}{2g}$
(D) $\frac{u^2 \sin^2 \alpha}{2g}$

120. The kinetic energy of a circular wheel of mass 50 kg and radius 200 mm, rotating at 300 rpm is :

(A) 193.5 Nm
(B) 293.5 Nm
(C) 393.5 Nm
(D) 493.5 Nm

Downloaded from www.gptcthirurangadi.in